Reactive Maintenance (4HH)

This scope item supports the following processes:

Reactive Maintenance

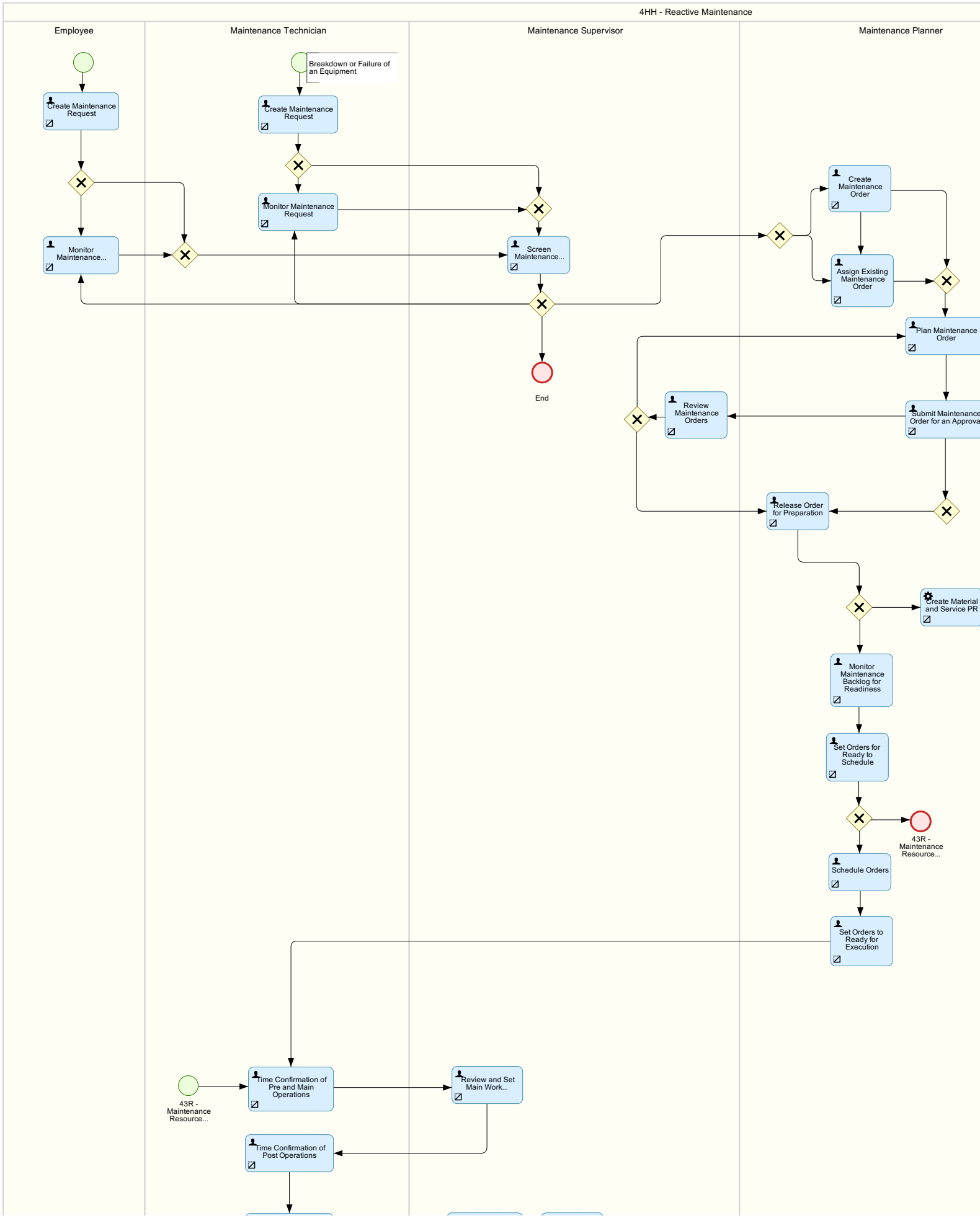

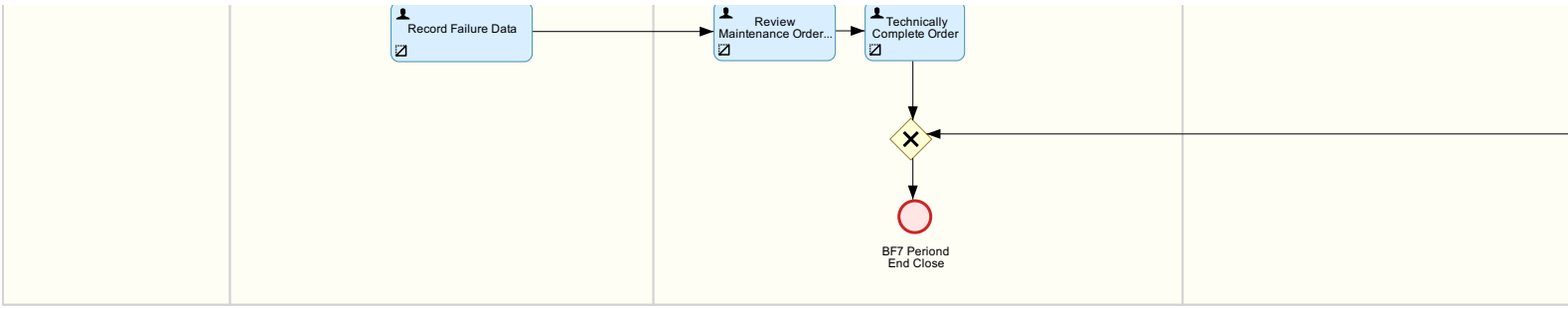
Record Failure Data
Review Maintenance Order...
Technically Complete Order
BF7 Periond End Close